SERVICE SPARE PARTS LIST

SPECIFY MODEL NO. WHEN ORDERING PARTS		DATE	REVISED DATE	PAGE
35cc Gas Chain Saw		2/15/2007	N/A	1/2
MODEL NO.	MCC1635A			

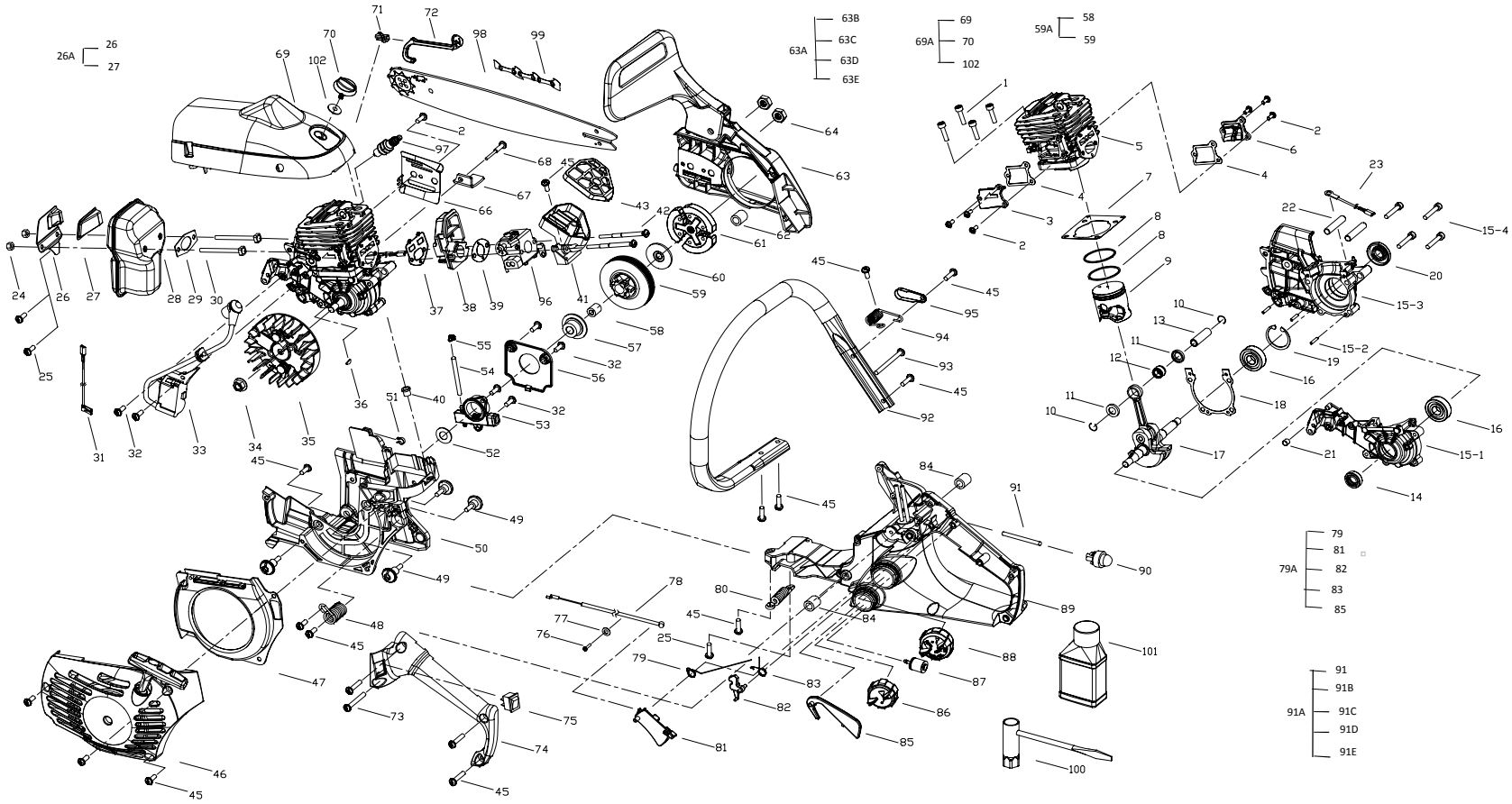

35cc Gas Chain Saw

MCC1635A

PARTS LIST

6/12/2009

No.	Parts No.	Description	Q	P Code
1	9SGEB-05-20	SCREW	4	110
2	**9SKKB-04-10**	**SCREW**	**7**	110
3	9067-310802	CAP	1	110
4	**9014-310803**	**GASKET**	**1**	110
5	9292-311001F自	CYLINDER	1	110
6	**9067-310801**	**CAP**	**1**	110
7	9014-310801	GASKET	1	110
8	**9189-311001**	**PISTON RING**	**2**	110
9	9290-311002	PISTON	1	110
10	**9CA-10.3**	**RING**	**1**	110
11	9131-310801	WASHER	1	110
12	**9NR-K101411**	**ROLLER**	**1**	110
13	9PC-10-32	PIN, PISTON	1	110
14	**9157-332101**	**SEAL**	**1**	110
15	9228-310819自	CLY CASE ASS'Y	1	110
15-1	**9072-310802F**	**CLY CASE, LEFT**	**1**	110
15-2	9PA-03-08S	PIN	3	110
15-3	**9072-310801F**	**CLY CASE, RIGHT**	**1**	110
15-4	9SKKB-05-27	SCREW	4	110
16	**9DB-620101**	**BEARING**	**2**	110
17	9228-310801-A	CRANK/ROD ASS'Y	1	110
18	**9014-310802**	**GASKET**	**1**	110
19	9CB-32	RING	1	110
20	**9157-310801**	**SEAL**	**1**	110
21	9059-311001	BEARING	1	110
22	**9191-310802**	**SCREW**	**2**	110
23	9010-311002	WIRE	1	110
24	**9NCC-05U**	**NUT**	**2**	110
25	9SKKB-05-14	SCREW	2	110
26A	AO9014-310810-US888	KIT SPARK ARRESTOR (26 & 27)	1	110
26	**9014-310810**	**COVER, MESH**	**1**	110
27	9016-310801	SPARK ARRESTER	1	110
28	**9228-311005T**	**MUFFLER ASS'Y**	**1**	110
29	9014-310804	GASKET	1	110
30	**9191-310803**	**SCREW**	**2**	110
31	9010-311003	WIRE	1	110
32	**9SKKB-04-14**	**SCREW**	**6**	110
33	9288-310801	IGNITION ASS'Y	1	110
34	**9NHC-08**	**NUT**	**1**	110
35	9169-310801	FLYWHEEL ASS'Y	1	110
36	**6221-830301**	**WOODRUFF KEY**	**1**	110
37	9014-310805	GASKET	1	110

35cc Gas Chain Saw

MCC1635A

PARTS LIST

6/12/2009

No.	Parts No.	Description	Q	P Code
38	**9082-311001**	**ISOLATER, CARBURETER**	**1**	110
39	9014-310006	GASKET	1	110
40	**9013-311003**	**RUBBER PLUG**	**1**	110
41	9228-311006	AIR BOX ASS'Y	1	110
42	**9SKKB-04-70**	**SCREW**	**2**	110
43	9183-311201	AIR FILTER	1	110
45	**9SKKBB05-18**	**SCREW**	**16**	110
46	9228-311002	STARTER HOUSING ASS'Y, 116C YELLOW	1	110
46A	9194-310801	ROPE	1	110
46C	9137-311001	PULLEY	1	110
46B	9228-310503	SPRING	1	110
46D	9196-310702	HANDLE	1	110
47	**9211-311001**	**CAP, AIRWAY**	**1**	110
48	9024-311001	SPRING	1	110
49	**9191-311001**	**SCREW**	**4**	110
50	9004-311001	BRACKET	1	110
51	**9079-311002**	**BUSHING**	**1**	110
52	9WFB-10-18	SPACER	1	110
53	**9228-310805**	**OIL PUMP ASS'Y**	**1**	110
54	9129-311005	HOSE OILER	1	110
55	**9154-310802**	**CONNECTOR**	**1**	110
56	9072-310806	CAP, ANTI-DUST	1	110
57	**9073-310803**	**WORM GEAR**	**1**	110
58	9NR-K101313	BEARING	1	110
59	**9200-311001**	**DRUM ASS'Y**	**1**	110
59A	**AO9200-311001-US888**	**CLUTCH DRUM ASS'Y (59 & 58)**	**1**	110
60	9014-310807	WASHER	1	110
61	**9228-311004**	**CLUTCH ASS'Y**	**1**	110
62	9013-311002	RUBBER PLUG	1	110
63	**9228-311001**	**BRAKE KIT ASS'Y, 116C YELLOW**	**1**	110
63A	**AO9191-310501-US888**	**KIT ADJUSTING SCREW & NUT (63B, 63C, 63E & 63D)**	**1**	110
63B	**9191-310501**	**ADJUSTING SCREW**	**1**	110
63C	**9043-311001**	**ADJUSTING NUT**	**1**	110
63D	**9CE-04**	**C RING**	**1**	110
63E	**9014-311001**	**PLATE**	**1**	110
64	9NAZ-5/16-18	NUT	2	110
66	**9014-310811**	**PLATE BAR**	**1**	110
67	9263-310801	CHAIN CATCH	1	110
68	**9SKKB-05-32**	**SCREW**	**1**	110
69A	**AO9067-311001-US888**	**SHROUD ASS'Y (69, 70 & 102)**	**1**	110
69	9067-311001	SHROUD	1	110
70	**9134-310801**	**KNOB**	**1**	110

35cc Gas Chain Saw

MCC1635A

PARTS LIST

6/12/2009

No.	Parts No.	Description	Q	P Code
71	9072-311001	HOLDER, CHOKE LEVER	1	110
72	**9114-311001**	**LEVER, CHOKE**	**1**	110
73	9SKKBB05-27	SCREW	1	110
74	**9068-311002**	**HANDLE ASS'Y (L)**	**1**	110
75	9022-310701	SWITCH	1	110
76	**9SKKBB04-10**	**SCREW**	**1**	110
77	9WFZ-04-12	WASHER	1	110
78	**9010-311001**	**CABLE, THROTTLE**	**1**	110
79A	**AO9028-311001-US888**	**KIT TRIGGER LOCKOT (79, 81, 82, 83 & 85)**	**1**	110
79	9024-311005	SPRING	1	110
80	**9024-310803**	**SPRING**	**1**	110
81	9028-311001	TRIGGER, THROTTLE	1	110
82	**9028-311002**	**TRIGGER, THROTTLE**	**1**	110
83	9024-311003	SPRING	1	110
84	**9013-311001**	**RUBBER PLUG**	**2**	110
85	9028-310801	TRIGGER, RELEASE	1	110
86	**9228-310809**	**OIL CAP ASS'Y**	**1**	110
87	9182-310101	FUEL FILTER	1	110
88	**9228-310820**	**FUEL CAP ASS'Y, 116C YELLOW**	**1**	110
89	9228-311003	HANDLE ASS'Y (R)	1	110
90	**9142-310002**	**PRIMER**	**1**	110
91A	**AO9129-311001-US888**	**KIT HOSES & FILTER (91B, 91C, 91D, 91E & 91)**	**1**	110
91B	**9129-311001**	**HOSE**	**1**	110
91C	**9129-311003**	**HOSE**	**1**	110
91D	**9012-330505**	**GOMMET**	**1**	110
91E	**9182-310101**	**FILTER**	**1**	110
91	9129-311002	HOSE	1	110
92	**9068-311001-A**	**HANDLE, FRONT**	**1**	110
93	9SKKBY05-32	SCREW	1	110
94	**9024-311002**	**SPRING**	**1**	110
95	9043-311002	CAP, SPRING	1	110
96	**9287-311001**	**CARBURETER WT-808**	**1**	110
97	9295-310801	SPARK PLUG CHAMPION RZ7C	1	110
98	**9040-310805F**	**BAR 16 INCH**	**1**	110
99	6220-210813	CHAIN 16 INCH	1	110
100	**9042-310201**	**SCRENCH**	**1**	110
101	9066-310101	OIL 40 TO 1	1	110
102	**9014-311003**	**KNOB RETAINER**	**1**	110